PRODUCT SHEET

Description:
Cent. Lock 1018/800mm, NPL, ø19x20mm, 40mm Tail,CK SISO,13mm Pegs & All Accessories

Item number:
14.03.129-7

Units	Box	Carton	HS Code	Barcode
Pcs.	12	60	8301300000	5704866035019

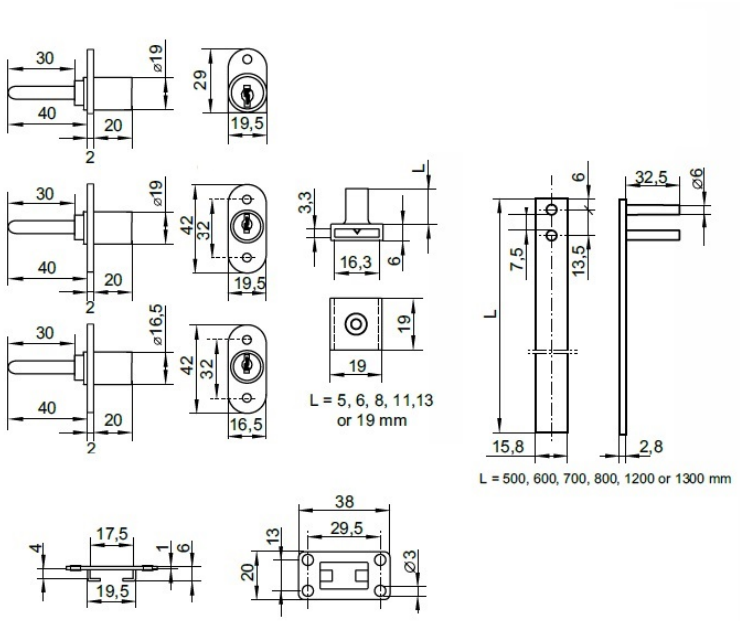

SISO A/S
Mileparken 11
DK-2740 Skovlunde
Denmark
VAT: DK 24786013

Phone +45 45 830 900

www.siso.dk
siso@siso.dk

Danske Bank
Nytorv Branch
Copenhagen
SWIFT: DABADKKK

Account no.
4180 3112 112936
IBAN Account
DK7230003112112936